DO NOT SCALE

1/ TYPE DB12 INDUSTRIAL SOUNDER

2/ AMBIENT TEMPERATURE -40°C TO +55°C

3/ WEIGHT:- 1.0±0.1kg

4/ MATERIAL:- GLASS REINFORCED POLYESTER

5/ SELF ADHESIVE ID LABEL, LETTER SIZE 5mm MAX

6/ SELF ADHESIVE TAG LABEL, LETTER SIZE 5mm MAX

7/ SELF ADHESIVE DUTY LABEL, LETTER SIZE 5mm MAX

8/ TERMINALS SUITABLE FOR UP TO 2.5mm SQ CABLE

9/ CABLE ENTRIES AVAILABLE AT "A" "B" AND "C" VIA KNOCKOUTS.

10/ OPTIONS:- PAINT FINISH

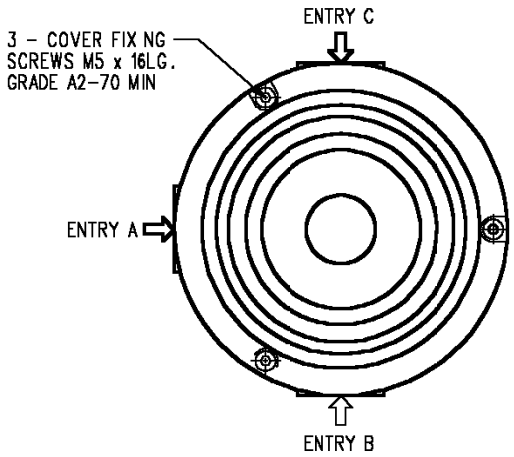

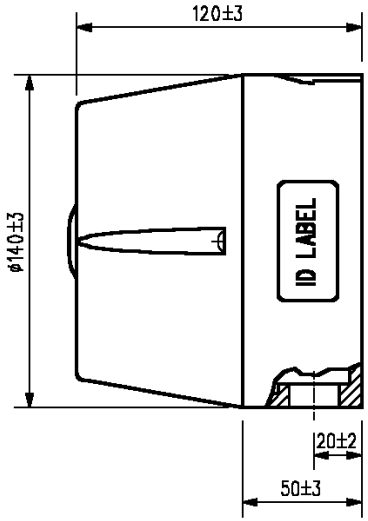

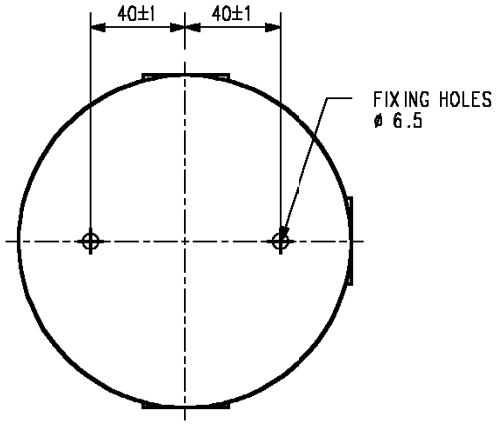

MEDC, Colliery Road, Pinxton, Nottingham NG16 6JF, U.K.
Tel: +44 (0)1773 812249
fax: +44 (0)1773 580282

DESIGNERS & MANUFACTURERS OF ELECTRICAL & ELECTRONIC EQUIPMENT & SYSTEMS FOR HAZARDOUS AREAS

ISSUES		ALL DIMENSIONS ARE IN MILLIMETRES UNLESS OTHERWISE STATED	THIS DRAWING IS CONFIDENTIAL AND IS THE PROPERTY OF MEDC AND MUST NOT BE REPRODUCED EITHER WHOLLY OR PARTLY. ALL RIGHTS IN RESPECT OF PATENTS, DESIGNS AND COPYRIGHT ARE RESERVED.	DRAWN BY: S. HUNT	DATE: 14-01-02	TITLE DB12 INDUSTRIAL CUSTOMER GENERAL ARRANGEMENT	
		REMOVE ALL BURRS AND SHARP EDGES		CHECKED BY: D. HAGIN	DATE: 15-01-02		
		MACHINE SYMBOLS THUS ✓ µm		APPROVED BY: M. SELDEN	DATE: 15-01-02		
				SCALE: —	SIZE A4	DRG No. 270-111	ISSUE A