Encoder WDG 58M

www.wachendorff-automation.com/wdg58m

Wachendorff Automation

... systems and encoders

- Complete systems
- Industrial rugged encoders to suit your application
- Standard range and customer versions
- Maximum permissible loads
- 48-hour express production
- Made in Germany
- Worldwide distributor network

IndustrieROBUST

Encoder WDG 58M (optical)

- Rugged industrial standard encoder
- Up to 25000 PPR by use of high grad electronics
- Maximum mechanical and electrical safety
- High noise immunity
- Full connection protection with 10 VDC up to 30 VDC
- High output frequency 600 kHz/2 MHz

www.wachendorff-automation.com/wdg58m

Resolution	
Pulses per revolution PPR	up to 25000 PPR

Mechanical Data	
Housing	
Flange	motorfeedback flange
Flange material	aluminum
Housing cap	aluminum
Housing	Ø 58 mm
Shaft(s)	
Shaft material	stainless steel
Starting torque	approx. 1 Ncm at ambient temperature
Shaft	Ø Conus 1/10; 9.25 mm
Shaft length	L: 16.5 mm
Max. Permissible shaft loading radial	80 N
Max. Permissible shaft loading axial	60 N
Bearings	
Bearings type	2 precision ball bearings
Nominale service life	1 x 10'9 revs. at 100 % rated shaft load 1 x 10'10 revs. at 40 % rated shaft load 1 x 10'11 revs. at 20 % rated shaft load
Max. operating speed	12000 rpm

Machinery Directive: basic data safety integrity level	
$MTTF_d$	200 a
Mission time (TM)	25 a
Nominale service life (L10h)	1 x 10'11 revs. at 20 % rated shaft load and 12000 rpm
Diagnostic coverage (DC)	0 %

Electrical Data	
Power supply/Current consumption	4,75 VDC up to 5,5 VDC: typ. 100 mA
Power supply/Current consumption	5 VDC up to 30 VDC: typ. 70 mA
Power supply/Current consumption	10 VDC up to 30 VDC: typ. 100 mA
Output circuit	TTL TTL, RS422 compatible, inv. HTL HTL, inv. 1 Vpp sin/cos
Pulse frequency	TTL ≤ 5000 ppr: max. 200 kHz HTL ≤ 5000 ppr: max. 200 kHz TTL more than 1200 ppr: max. 2 MHz HTL more than 1200 ppr: max. 600 kHz 1 Vpp sin/cos: max. 100 kHz
Channels	AB ABN and inverted signals
Load	max. 40 mA / channel @ 1 Vpp sin/cos: min. 120 Ohm
Circuit protection	circuit type F24, G24, H24, I24, P24, R24 only
Accuracy	
Phase offset	90° ± max. 7.5 % of the period duration
pulse-/pause-ratio	≤5000 ppr: 50 % ± max. 7 % Output circuits F24, P24, F05, P05, 645: 50 % ± max. 10 %

Environmental data	
ESD (DIN EN 61000-4-2):	8 kV
Burst (DIN EN 61000-4-4):	2 kV
includes EMC:	DIN EN 61000-6-2 DIN EN 61000-6-3
Vibration: (DIN EN 60068-2-6)	50 m/s^2 (10 Hz up to 2000 Hz)
Shock: (DIN EN 60068-2-27)	1000 m/s^2 (6 ms)
Design:	according DIN VDE 0160

Duty information	
Customs tariff number:	90318020
Country of origin:	Germany

General Data	
Weight	approx. 220 g
Connections	cable output, 2 m, tangential
Protection rating (EN 60529)	Housing: IP65, IP67; shaft sealed: IP65
Operating temperature	-20 °C up to +80 °C 1 Vpp: -10 °C up to +70 °C
Storage temperature	-20 °C up to +80 °C

More Information
General technical data and safety instructions **http://www.wachendorff-automation.com/gtd**
Options **http://www.wachendorff-automation.com/acc**

WDG 58M: Cable connection T3, tangential, with 2 m cable

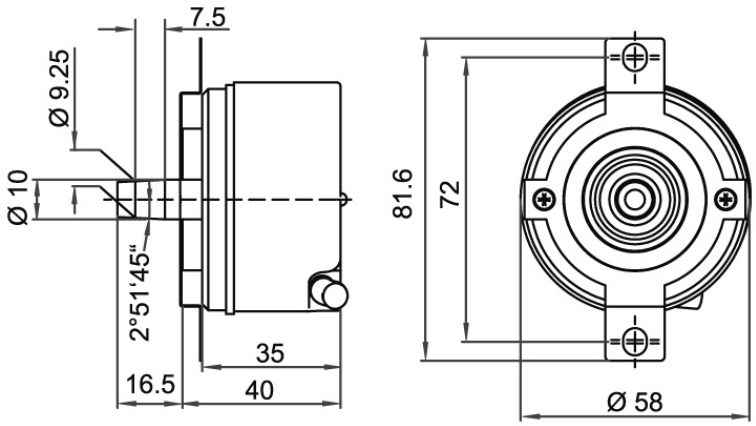

Description		ABN inv. poss.
T3	tangential, shield connected to encoder housing	•

Assignments					
	T3	**T3**	**T3**	**T3**	**T3**
Circuit	G05, G24	F05, H05, F24, H24, H30	I05, I24, 524	P05, R05, P24, R24, 245, 645, R30	SIN
GND	WH	WH	WH	WH	WH
(+) Vcc	BN	BN	BN	BN	BN
A	GN	GN	GN	GN	GN
B	YE	YE	YE	YE	GY
N	GY	GY	GY	GY	-
Light reserve warning	PK	-	PK	-	-
A inv.	-	-	RD	RD	YE
B inv.	-	-	BK, (BU at ACA)	BK, (BU at ACA)	PK
N inv.	-	-	VT	VT	-
Shield	flex	flex	flex	flex	flex

Options

Cable length	Order key
The encoder WDG 58M can be supplied with more than 2 m cable. The maximum cable length depends on the supply voltage and the frequency; see www.wachendorff-automation.com/atd Please extend the standard order code with a three figure number, specifying the cable length in decimetres. Example: 5 m cable = 050	**XXX = Decimeter**

Example Order No.	Type	Your encoder
WDG 58M	WDG 58M	WDG 58M
	Pulses per revolution PPR:	
1024	4, 6, 25, 32, 36, 50, 60, 64, 70, 88, 100, 120, 125, 150, 180, 200, 240, 250, 256, 300, 314, 360, 400, 500, 512, 600, 720, 750, 768, 800, 900, 1000, 1024, 1200, 1250, 1270, 1500, 1800, 2000, 2048, 2500, 3000, 3600, 4000, 4096, 5000, 8000, 8192, 10000, 10240, 12500, 16384, 20000, 20480, 25000 1 Vpp Sin/Cos only 1024, 2048 Other PPRs on request	
	Channels:	
ABN	AB, ABN (SIN: AB)	
	Output circuit	

	Resolution PPR	Power supply VDC	Output circuit	Light reserve warning	Order key	
G24	up to 2500	5 - 30	HTL (TTL at 5 VDC)	-	H30	
		5 - 30	HTL, inv. (TTL/RS422 comp. at 5 VDC)	-	R30	
	up to 5000	4.75 - 5.5	TTL	•	G05	
		4.75 - 5.5	TTL	-	H05	
		4.75 - 5.5	TTL, RS422 comp., inverted	•	I05	
		4.75 - 5.5	TTL, RS422 comp., inverted	-	R05	
		10 - 30	HTL	•	G24	
		10 - 30	HTL	-	H24	
		10 - 30	HTL inverted	•	I24	
		10 - 30	HTL inverted	-	R24	
		10 - 30	TTL, RS422 comp., inverted	•	524	
		10 - 30	TTL, RS422 comp., inverted	-	245	
	(higher frequency) 1200 up to 25000	4.75 - 5.5	TTL	-	F05	
		4.75 - 5.5	TTL, RS422 comp., inverted	-	P05	
		10 - 30	HTL	-	F24	
		10 - 30	HTL inverted	-	P24	
		10 - 30	TTL, RS422 comp., inverted	-	645	
	1024, 2048	4.75 - 5.5	1 Vpp sin/cos	-	SIN	

	Electrical connections			
T3	**Description**	**ABN inv. poss.**	**Order key**	
	Cable: length (2 m standard, WDG 58T: 1 m)			
	tangential, shield connected to encoder housing	•	T3	
	Options			
	Description	**Order key**		
	Without option	Empty		
	Cable length	XXX = Decimeter		

Example Order No.=	WDG 58M	1024	ABN	G24	T3		WDG 58M						Your encoder

For further information please contact our local distributor.
Here you find a list of our distributors worldwide.
https://www.wachendorff-automation.com/contact-sales-en/

Wachendorff Automation GmbH & Co. KG
Industriestrasse 7 • 65366 Geisenheim
Germany

Phone: +49 67 22 / 99 65 25
E-Mail: wdg@wachendorff.de
www.wachendorff-automation.de